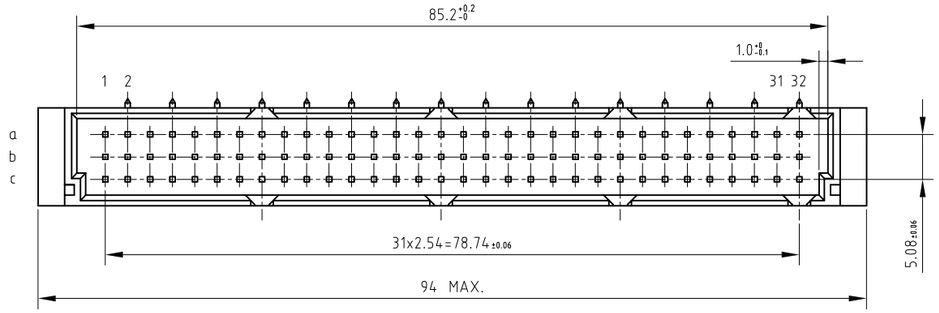

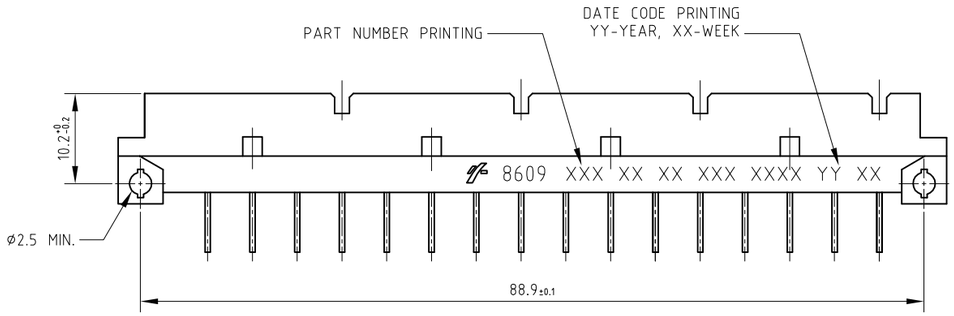

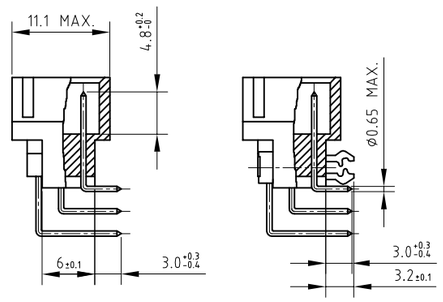

PCB DRILLING DETAILS

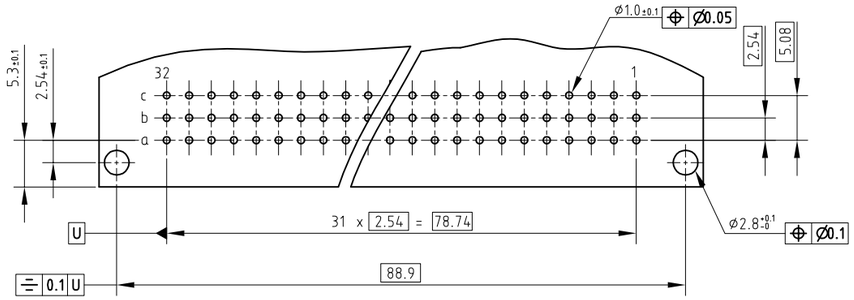

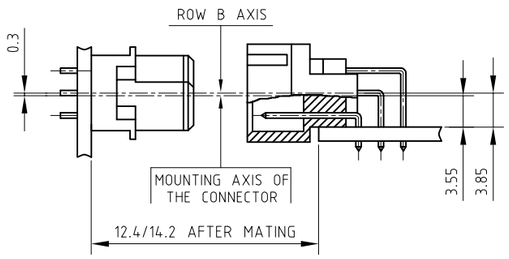

TECHNICAL SPECIFICATION

HOUSING MATERIAL	:	THERMOPLASTIC POLYESTER UL94V0; GREY
HOUSING CAN WITHSTAND EXPOSURE TO LEAD FREE WAVE SOLDERING TEMPERATURE OF 260-265°C		
WHEN USED WITH PROTECTIVE ADHESIVE OR PROTECTIVE METALLIC DEVICE FOR ANGLE CONNECTORS AS		
IT IS USED IN CLASSICAL LEAD WAVE SOLDERING AT 235-250°C.		
CONTACT & HARPOON MATERIAL	:	COPPER ALLOY
CONTACT PLATING		
CONTACT ZONE	:	Au OVER Ni
TERMINATION ZONE	:	SnPb OVER Ni FOR TIN LEAD VERSION
		Sn (PURE MATT) OVER Ni FOR LEAD FREE VERSION
HARPOON PLATING	:	SnPb OVER Ni FOR TIN LEAD VERSION
		Sn (PURE MATT) OVER Ni FOR LEAD FREE VERSION

ELECTRICAL DATA

CURRENT RATING AT 20°C	:	1.5 A
CURRENT (I MAX)	:	2 A
TEMPERATURE RANGE	:	-55°C TO +125°C
CONTACT RESISTANCE	:	≤ 20 mΩ
INSULATION RESISTANCE	:	≥10^8 MΩ
TEST VOLTAGE (rms)	:	1000 V

MECHANICAL DATA

INSERTION FORCE PER CONTACT	:	≤0.94 N
EXTRACTION FORCE PER CONTACT	:	≥0.15 N

REFERENCE SPECIFICATION : DIN 41612 / IEC 603-2

SERIES	8609	3	48	7	1	13	7	4	8	000E

ROWS FITTED WITH CONTACTS
- ROW a b c — 3 — 48
- ROW a - c — 4 — 32

NO. OF CONTACTS

TYPE OF INSULATOR
- 3 ROW MALE INSULATOR — 7

METHOD OF MOUNTING
- STANDARD MOUNTING - STYLE C — 1

TERMINATION
- ANGLED SPILL — 13

OPTIONS
- NO OPTION — 7
- WITH HARPOONS — H

PERFORMANCE CLASS
- DIN 41612 CLASS 3 — 4
- DIN 41612 CLASS 2 — 5
- DIN 41612 CLASS 1 — 6
- AS PER MIL C 55302 / JSS 50808 — 8

PITCH PER ROW
- 5.08 mm — 8

- TIN LEAD VERSION — 000E
- LEAD FREE VERSION — ELF

NOTES:

1. THE "LF" PRODUCTS MEET EUROPEAN UNION DIRECTIVES AND OTHER COUNTRY REGULATIONS AS DESCRIBED IN GS-22-008.
2. THE HOUSING WILL WITHSTAND EXPOSURE TO 260°C PEAK TEMPERATURE FOR 3.5 SECONDS IN A WAVE SOLDER APPLICATION WITH A 1.6 MM MINIMUM THICK CIRCUIT BOARD.
3. LEAD FREE OR RoHS DIRECTIVE LABELING TO BE PROVIDED AS PER GS-14-920 FOR LEAD FREE VERSION.

ltr	ecn no	dr	date
A	104-0084	MINI	2004-09-18
B	105-0089	MINI	2005-05-19
C	106-0061	MINI	2006-05-31
D	107-0111	KR	2007-09-05

dr	MINI.K.VANDANATH	2004-09-18
engr	RAKHEE GEORGE	2004-09-18
chr	RAKHEE GEORGE	2007-09-05
appd	RAKHEE GEORGE	2007-09-05

mat'l. code: SEE TECH. SPEC.
surface: ISO 1302
tolerance: ISO 406 ISO 1101
tolerances unless otherwise specified: angles 0°±1°; linear .0±.1
projection
mm
scale 3:2
product family: 8609
title: DIN STANDARD HEADER ANGLED SPILL DIN 41612 STYLE-C
dwg no: C-8609-2002
sheet 1 of 1
size: A3
type: Product Customer Drawing
sheet index: revision D; sheet 1

FCIconnect.com
Copyright FCI